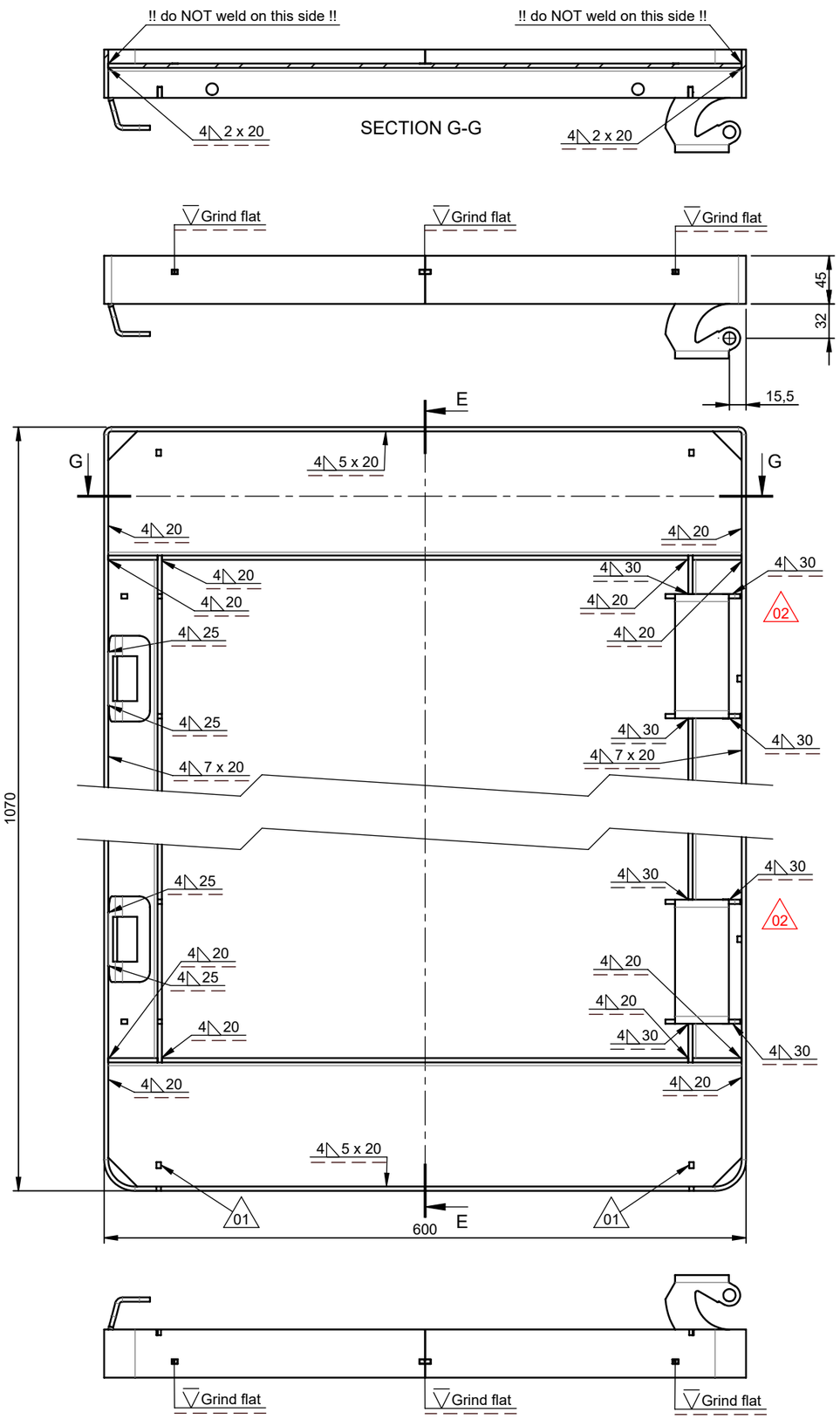

SECTION E-E

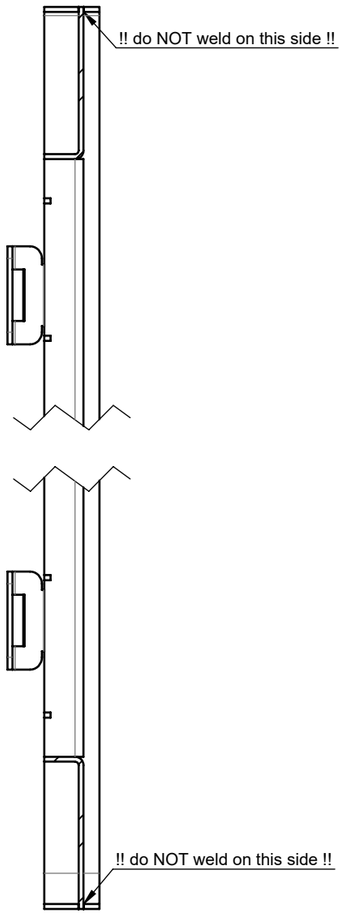

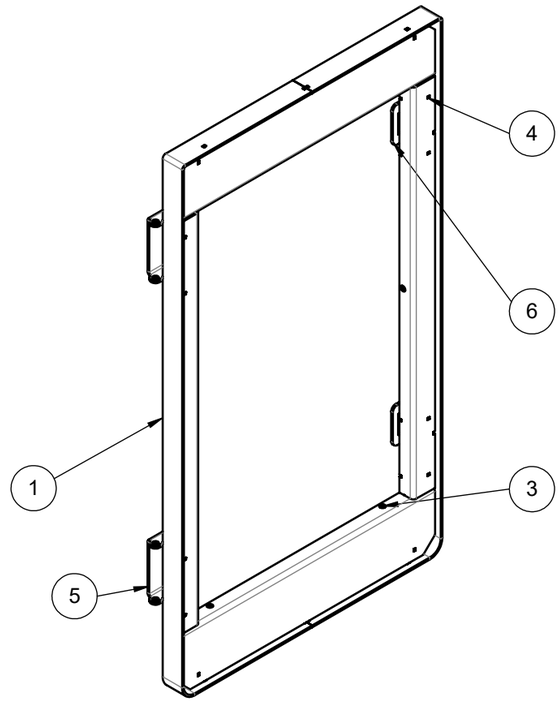

Material	Coating - 1e layer	Coating - 2e layer	Coating - 3e layer
S235JR	Primer, ALZ90F-K25 INTERPON PZ 790	Polyester powder, according to Qualicoat	Anti graffitti (IGP Durathan 8909)

Pos. no.	Qty.	Art.no.	Item name	Material	Remark	Dwg no.	Rev.
6	2	-	Reposa Bin 140-240L - Door locking plate	S235JR	-	12.06	01
5	2	-	Circ Bin 140-240L - Door hinge	S235JR	-	12.04	01
4	2	-	Circ Bin 140-240L - Door side profile	Refer to order	-	12.03	00
3	2	-	Circ Bin 140-240L - High profile 140L	Refer to order	-	11.05	00
2	1	-	Circ Bin 140-240L - Door frame 140L right	Refer to order	-	12.02	00
1	1	-	Circ Bin 140-240L - Door frame 140L left	Refer to order	-	12.01	00

Rev.	Description	Date	Name
02	Redesigned hinge	14-2-2024	LSP
01	Door guides removed	31/10/2019	SHA

Material: Refer to order

Finishing:

Coating:

VelopA
www.velopa.com

concept: 18-04-2018	by: FWI	drawn : FS Withagen	
definite : -	by: -	date : 18-4-2018	
expired : -	by: -	project:	
specific norm: -		units: mm	scale: 1:5

Gen. tolerances according to NEN 2768-1; (for lineair measurements in mm) unless stated otherwise:

0,5 - 6	±0,3	120 - 400	±1,2
6 - 30	±0,5	400 - 1000	±2
30 - 120	±0,8	1000 - 2000	±3
		2000 - 4000	±4

(for shortest side of angular measurements in mm) unless stated otherwise:

0 - 10	±1,3°	50 - 120	±0,3°
10 - 50	±1,0°	120 - 400	±0,15°
>400	±0,1°		

weight: 15.01kg

product no.	dwg.no.	rev
S020-310-	12.00	-02

art.no.: -

A3

Circ Bin 140-240L - Door weldment 140L

P:\---PO-ALGEMEEN---\PO-Projecten\AA- Inactieve projecten\P19-403 Circ Bin 140-240L (Leiden)\M4 - Uitvoeringsfase\1. Technische Tekeningen\12.00-02 Circ Bin 140-240L - Door weldment 140L

© Copyright VelopA B.V.: All rights reserved, Art. 31 and seq. of the Copyright Act.
This document remains property of VelopA B.V. and may not be revealed to third parties, duplicated or used for any application, without explicit permission of the owner.

© Copyright VelopA B.V.: Alle rechten voorbehouden, Art. 31 e.v. van de auteurswet.
Dit document blijft eigendom van VelopA B.V. en mag niet aan derden ter inzage worden gegeven, gedupliceerd of voor uitvoering worden gebruikt, zonder uitdrukkelijke toestemming van de eigenaar.